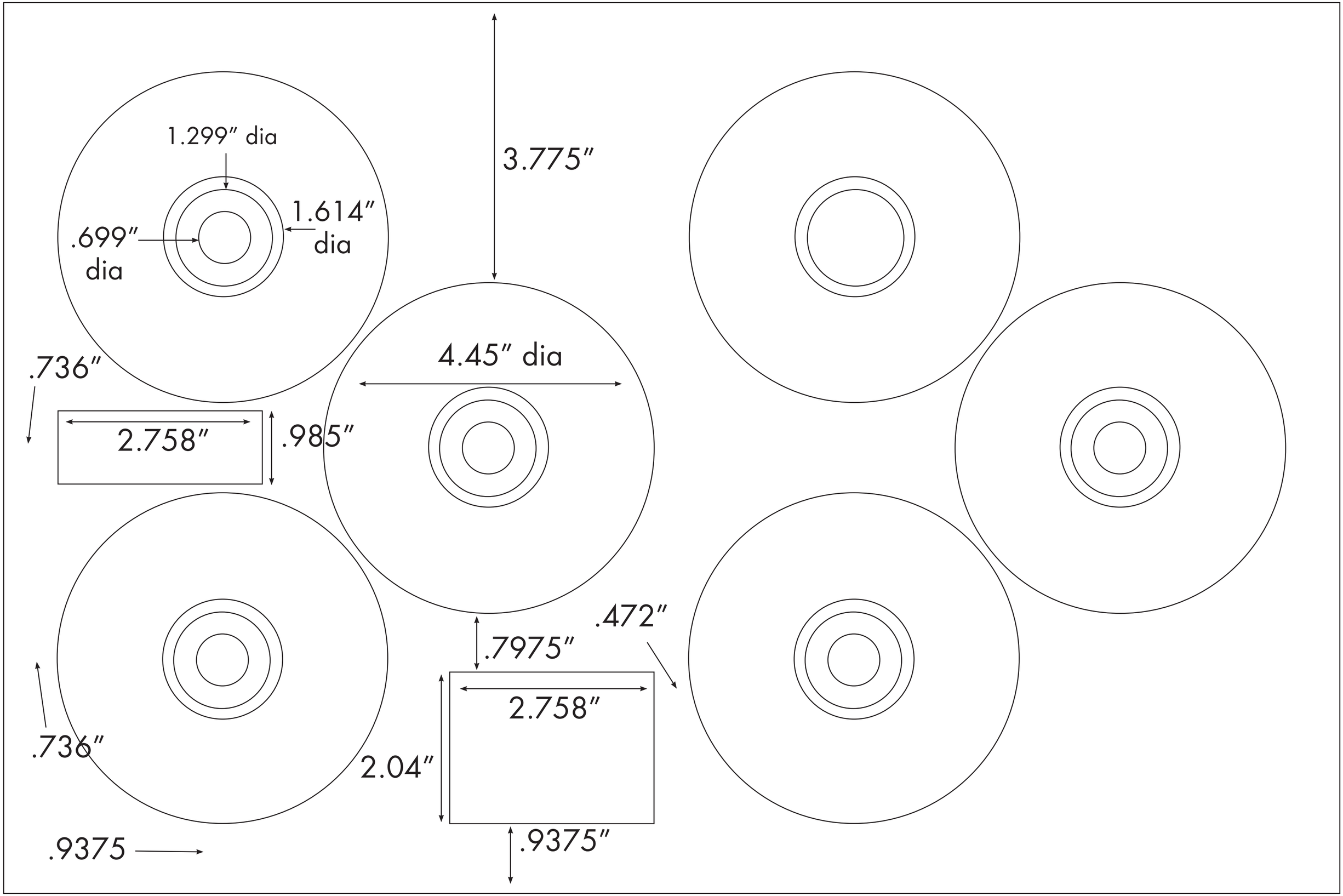
1.299″ dia
1.614″ dia
.699″ dia
3.775″
4.45″ dia
.736″
2.758″
.985″
.472″
.7975″
2.758″
.736″
2.04″
.9375
.9375″